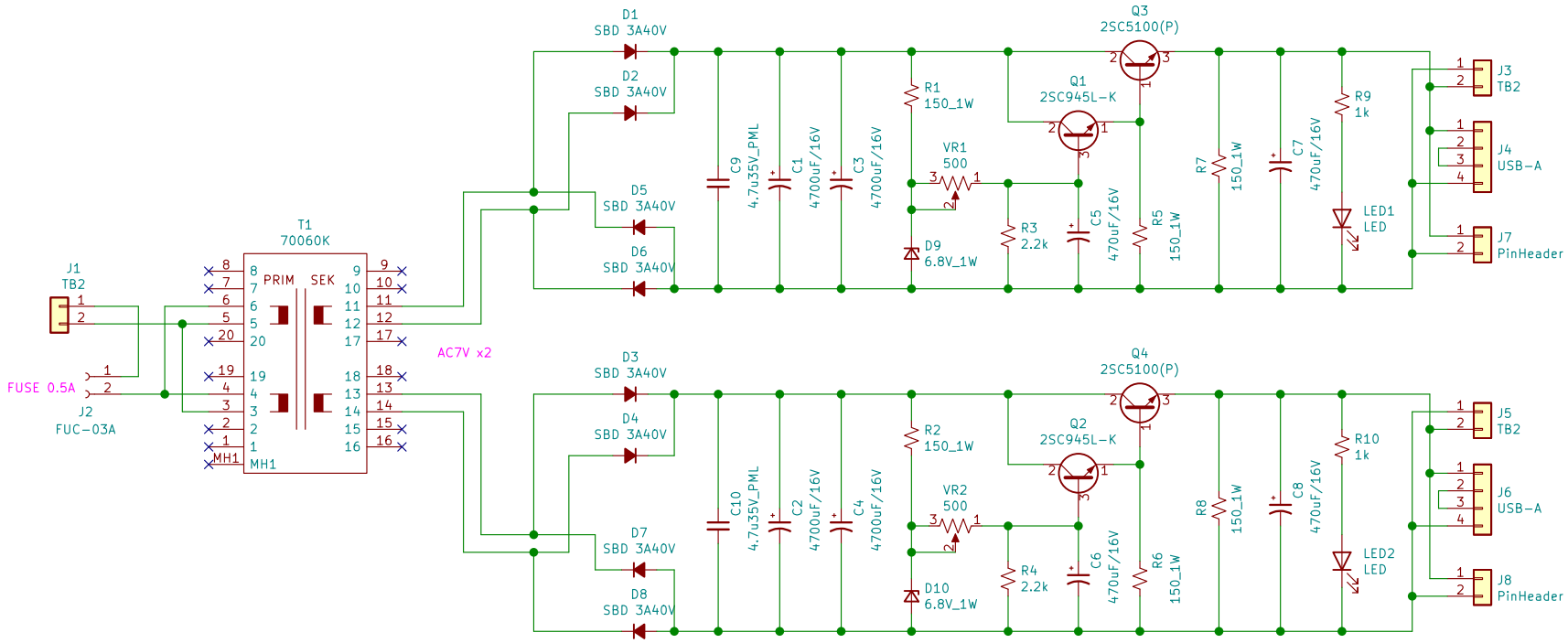

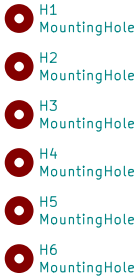

Sheet: /		
File: D_DC-Arrow_b.sch		
Title: DUAL DC-ARROW		
Size: A4	Date: 2021-07-18	**Rev: 1.1**
		Id: 1/1